MV-11 1/2” Manual 3 Way Valve

Product Overview

The MV-11 PFA 3 Way Diaphragm Valve is designed for use in high purity semiconductor applications. It is also ideally suited for ultra-pure water and aggressive chemical or gas applications. The design utilizes a molded high purity PFA body with precision machined sealing areas. One piece machined modified PTFE diaphragms are also utilized for excellent flexibility and life. A full 1/2” orifice provides maximum flow capability in a compact package.

Features

One piece precision machined diaphragm manufactured from the latest technology modified PTFE. Provides over five times the flexural life as compared to conventional PTFE. Tongue and groove seat and diaphragm for positive through flow shut off and diaphragm to body seal.

PVDF coated stainless steel spring.

Submergible option isolates all valve components from the external environment.

Benefits

High cycle life.

Lower replacement costs.

Less downtime.

Reduces effects of corrosive environments.

Valve remains functional while operating in wet or gaseous corrosive environments.

Specifications

Materials of Construction

Wetted: PFA, Modified PTFE
Non-wetted: PFA, PVDF, Viton seals, PTFE coated SS springs

Pressure Ranges

COM to NO: 27” HG vacuum (913 mbar) to 80 PSIG (5.5 bar)
COM to NC: 27” HG vacuum (913 mbar) to 25 PSIG (1.7 bar) minimum
NC to COM: 27” HG vacuum (913 mbar) to 80 PSIG (5.5 bar) with 50 PSIG (3.4 bar) maximum back pressure

Pressure ranges for operation at ambient temperatures. For use at higher temperatures consult Pressure/Temperature chart on page 3.

Temperature Ranges

Ambient: 0° - 150° F (17° - 66° C)
Fluid: 0° - 266° F (17° - 130° C)

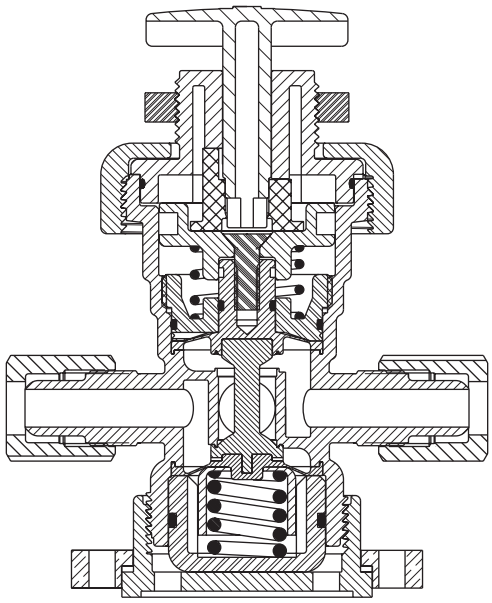

Parker Hannifin Corporation
Partek Operation
Tucson, AZ

BRACKETED DIMENSIONS ARE IN mm.

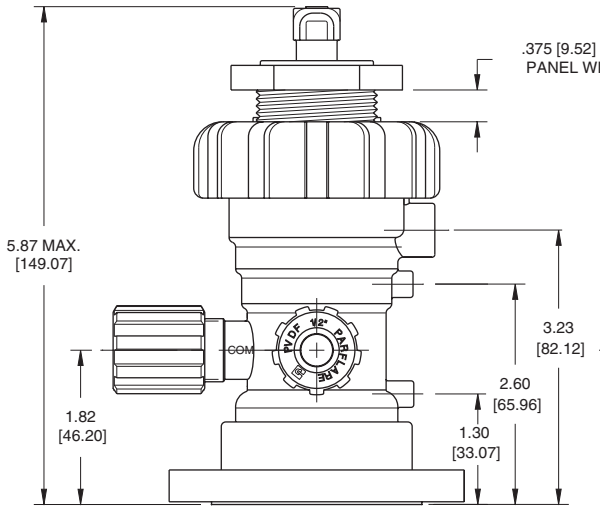

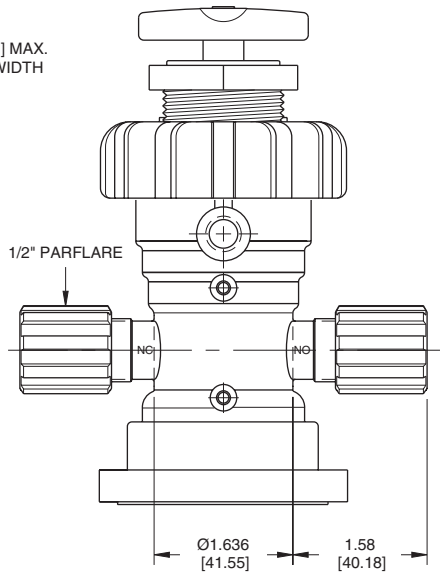

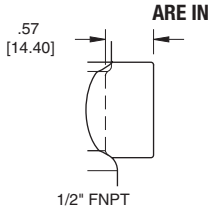

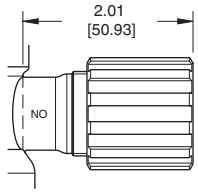

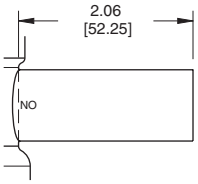

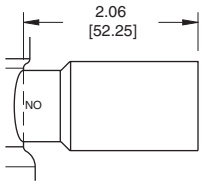

TEST PORT CONNECTIONS, 1/4-28 UNF

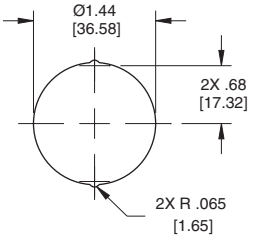

PANEL HOLE DETAIL

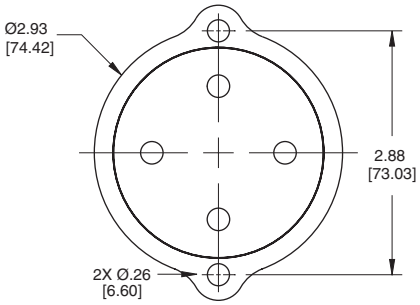

MOUNTING DETAIL

Model Number	*Cv*	*Kv*	*Flow Configuration*	*Port Configuration*
MV-11-021	1.9	27.1	3 WAY	1/2" Parflare
MV-11-022	2.8	40.0		3/4" Parflare
MV-11-023	2.8	40.0		1/2" Parbond
MV-11-024	2.8	40.0		3/4" Parbond
MV-11-025	2.8	40.0		1/2" FNPT

Parflare models are supplied with PVDF nuts. For PFA nuts add -T to model number.

PRESSURE DROP VS. FLOW RATE

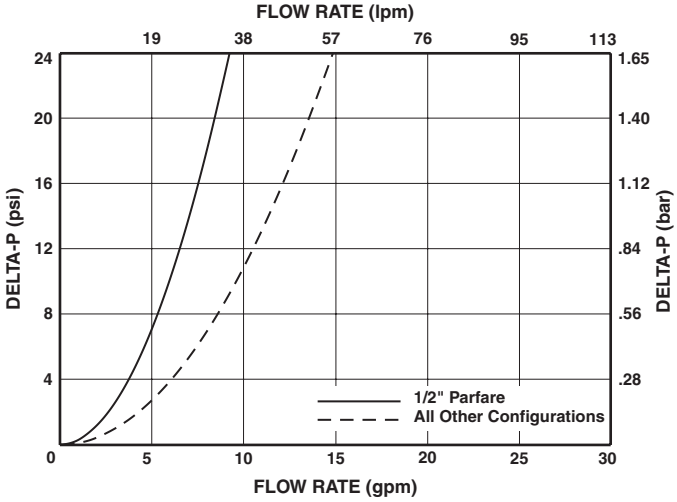

Parker Hannifin Corporation
Partek Operation
Tucson, AZ