MV-13 Manual Needle Valve

Product Overview

The MV-13 PFA Needle Valve is designed for high purity or aggressive chemical and gas applications. The design utilizes a molded high purity PFA body and stem as the only wetted components. The stem sealing area is precision machined for smooth, consistent flow. A PTFE ferrule assures a leak tight seal between stem and body. A PFA stem stop prevents removal of stem from body during operation. The MV-13 is available in straight through and angle configurations, several orifice sizes, and numerous end connections.

Features

One piece PFA stem/ handle and bodies.

PFA stem stop.

Angle and straight through configurations, with numerous end configurations including Parflare available.

Benefits

High strength and corrosion resistance.

Safer operation.

Reduces connections, mounting space, and overall cost.

Specifications

Materials of Construction

Wetted: PFA, PTFE
Non-wetted: PFA, ETFE, PVDF

Pressure Ranges

27” HG vacuum (913 mbar) to 100 PSIG (7 bar)

Pressure ranges for operation at ambient temperatures. For use at higher temperatures consult Pressure/Temperature chart on page 3.

Temperature Ranges

Ambient: 0° - 212° F (17° - 100° C)
Fluid: 0° - 266° F (17° - 130° C)

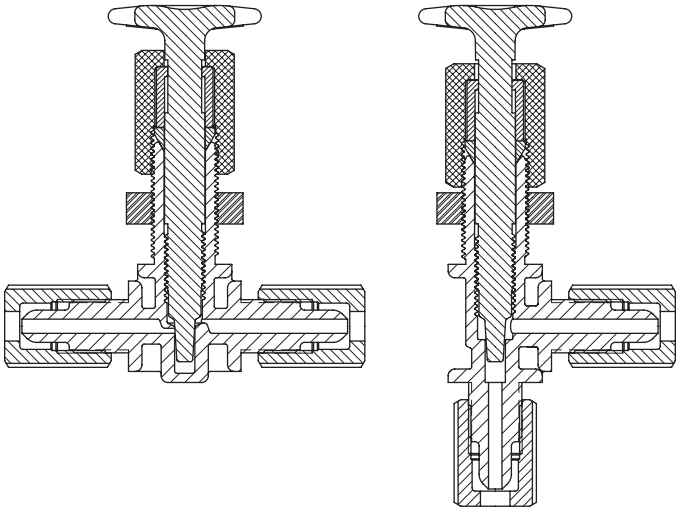

Parker Hannifin Corporation
Partek Operation
Tucson, AZ

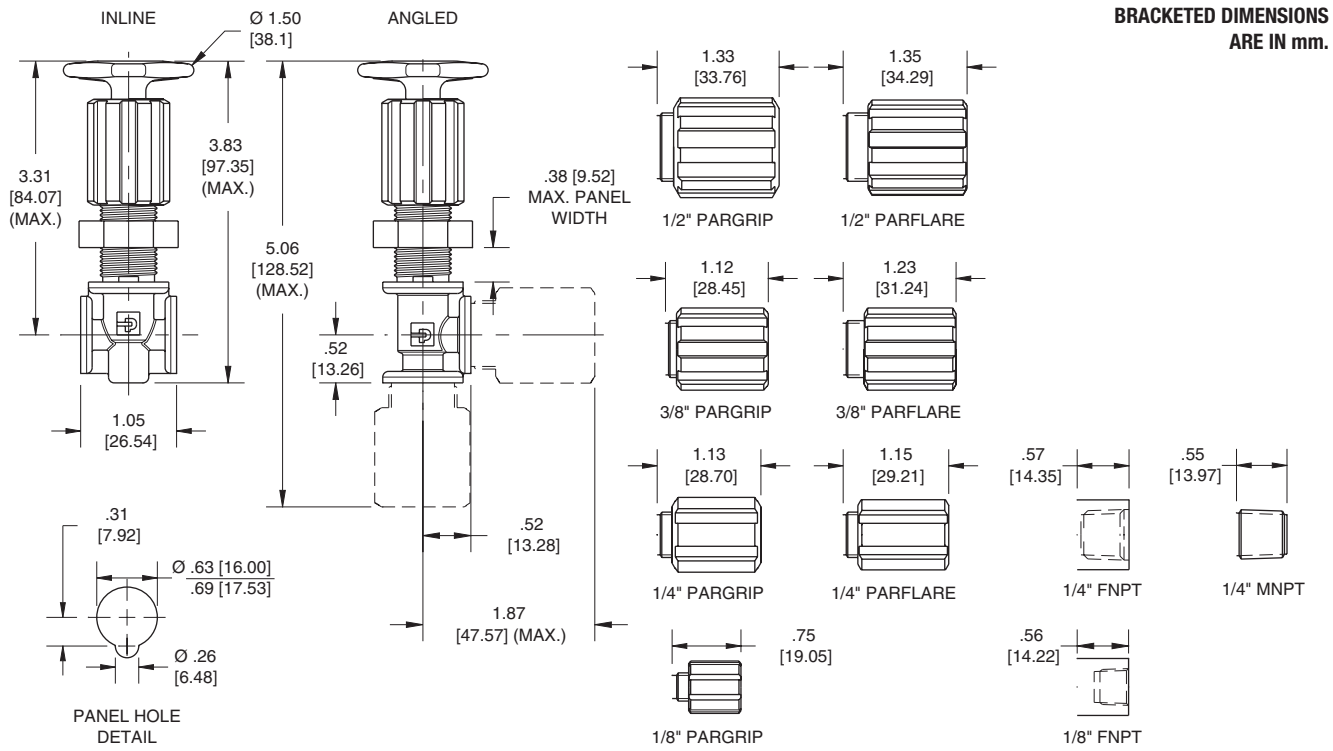

Model Number	*Orifice Size*	*Inlet / Outlet Port Configuration*	*Flow Configuration*
MV-13-100	.063	1/8" Pargrip X 1/8" Pargrip	Straight
MV-13-104	.063	1/4" Parflare X 1/4" Parflare	
MV-13-105	.063	1/4" MNPT X 1/4" Parflare	
MV-13-120	.125	1/4" Pargrip X 1/4" Pargrip	
MV-13-124	.125	3/8" Parflare X 3/8" Parflare	
MV-13-125	.125	1/2" Parflare X 1/2" Parflare	
MV-13-126	.125	1/8" FNPT X 1/8" FNPT	
MV-13-163	.188	3/8" Pargrip X 3/8" Pargrip	
MV-13-166	.188	1/2" Pargrip X 1/2" Pargrip	
MV-13-170	.188	1/4" FNPT X 1/4" FNPT	
MV-13-222	.125	1/4" Parflare X 1/4" Parflare	Angle
MV-13-223	.125	1/4" FNPT X 1/4" FNPT	
MV-13-225	.125	3/8" Parflare X 3/8" Parflare	

Parflare and Pargrip model numbers are supplied with PFA nuts.

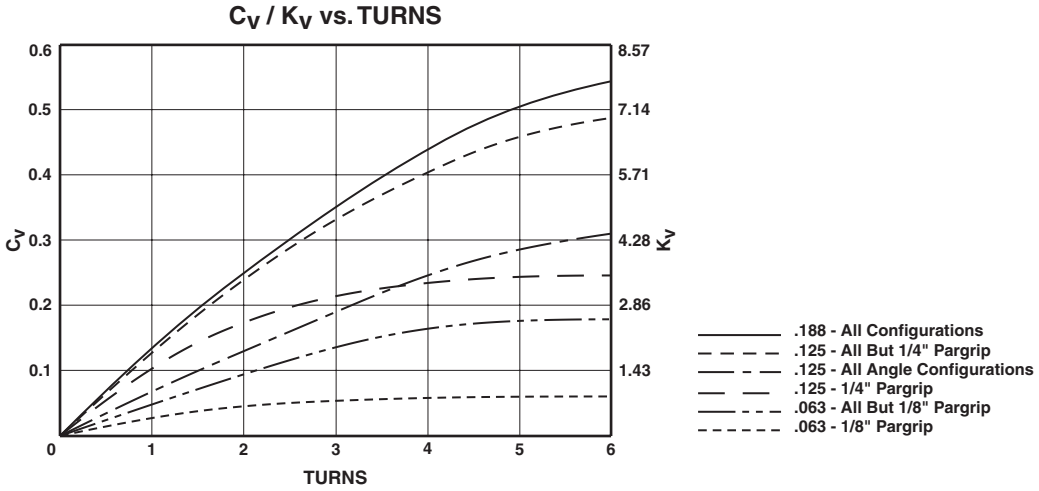

Parker Hannifin Corporation
Partek Operation
Tucson, AZ